APPLICATION FOR PERMIT TO TAP SEWER

(Print or Type)

Owner RACHEL ROOK

Address 1057 REYNOLDS

Contractor MARVIN BEHNEFELDT

Address RT #4 NAPOLEON Tel. 758-3198

NO. —

BLDG. PERMIT —

PERMIT FEE $ —

DATE PAID —

for office use only

LOCATION OF CONNECTION

Street and No. 1057 REYNOLDS Sanitary X Storm

Lot No. Subdivision Size of Tap 6"

Size and Type of Sewer PVC ALL WORK MUST BE INSPECTED

I certify that the sewer will be used only as indicated and no other Drainage will be connected.

Date 10-17-79 Signature Marvin Behnfeldt
owner-builder-agent

do not write below this line

INSPECTION RECORD

Date Inspected 10-18-79 Size and Type of Sewer 4" PVC

Location SIDE to REAR Depth SEE DRAWING Type of Test N/A

Inspected and Approved By: Bruce Ulrich
Inspector

10-18-79
Date

Additional Information Bruce Ulrich

Send copy to:

SKETCH OF INSTALLATION

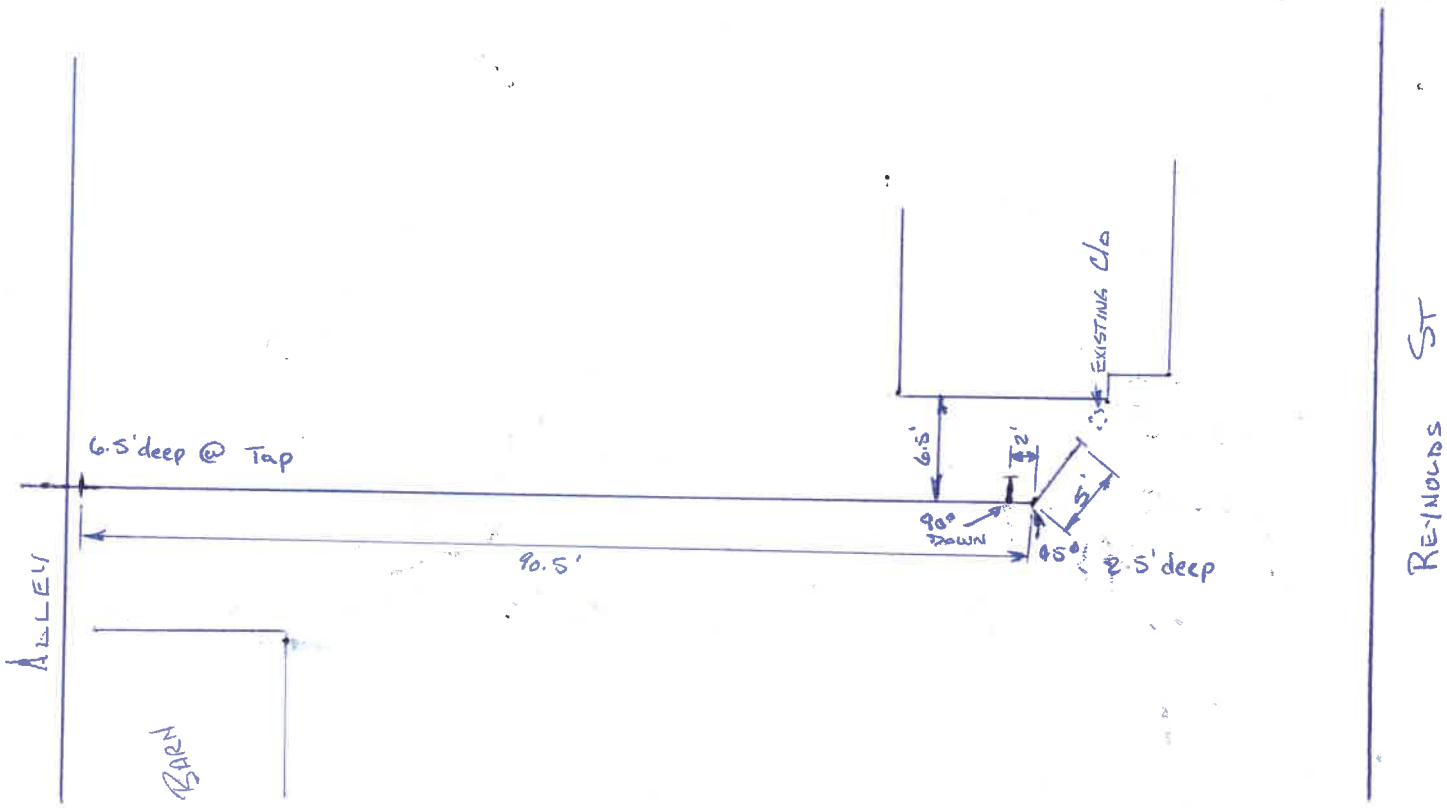

White-Applicant Yellow-Building Dept. Pink-Clerk-Treasurer